Kit schematic

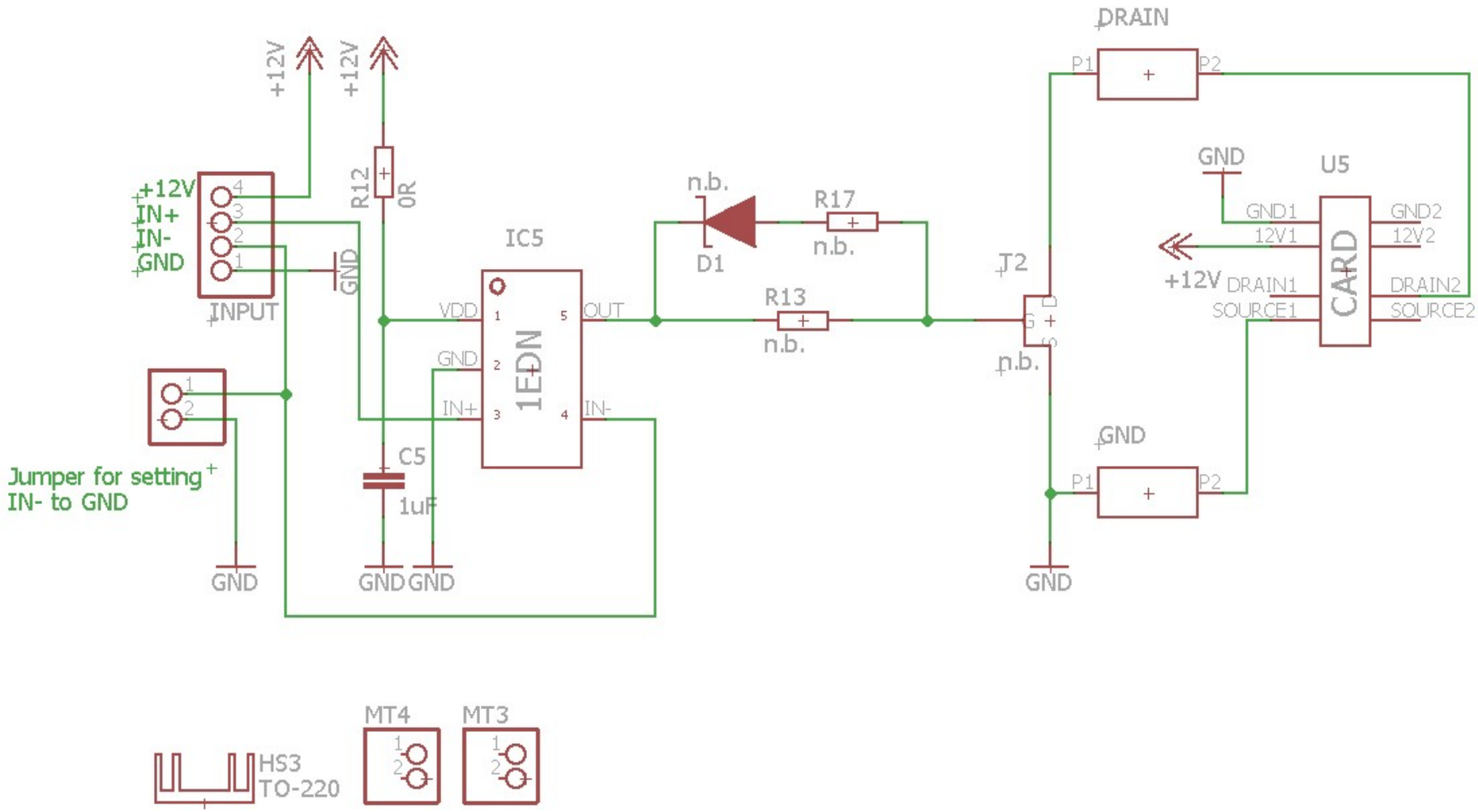

Copyright © Infineon Technologies AG 2019. All rights reserved.